RNN

Vanilla RNN

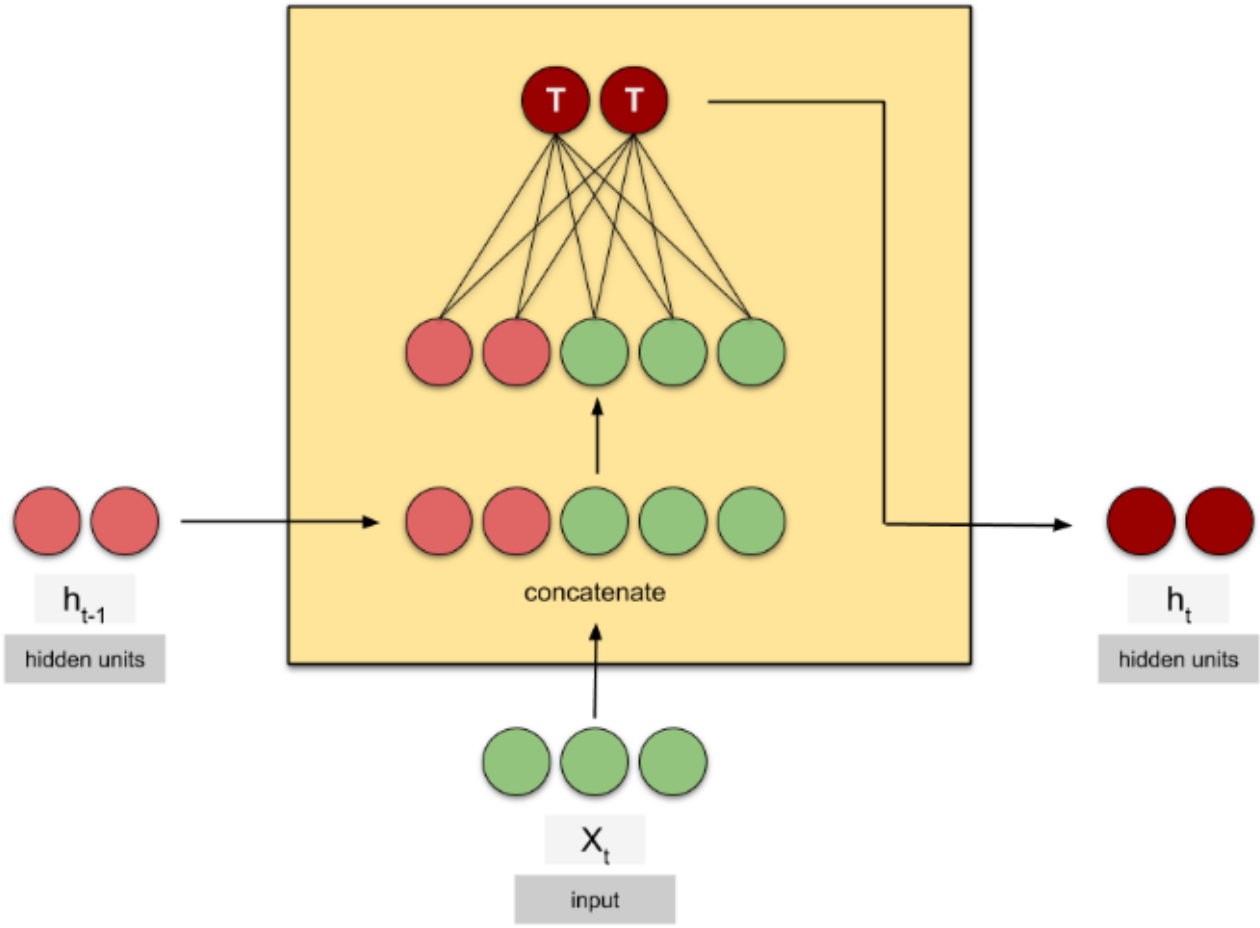

has vanishing gradients

Could use gradient clipping

$$\hat{g} \leftarrow \frac{\partial E}{\partial W}$$
if $\| \hat{g} \| \geq threshold$ **then**
$$\hat{g} \leftarrow \frac{threshold}{\| \hat{g} \|}\hat{g}$$
end if

LSTM/GRU

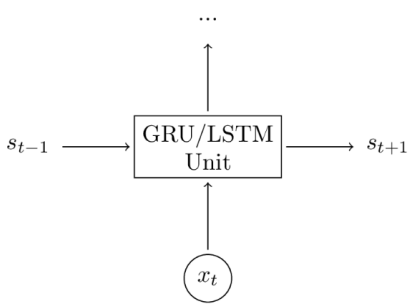

Treat GRU/LSTM as a black box to compute next hidden state

Circle is point-wise multiplication

LSTM
Typical lstm

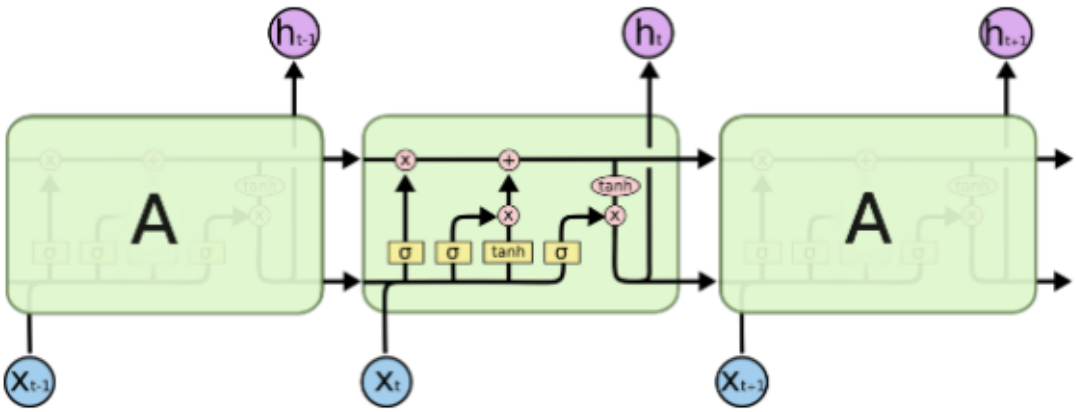

The repeating module in an LSTM contains four interacting layers.

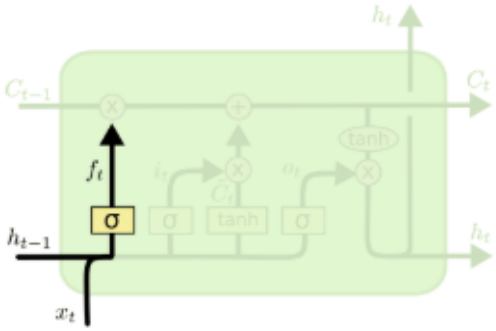

$$f_t = \sigma\left(W_f \cdot [h_{t-1}, x_t] \ + \ b_f\right)$$

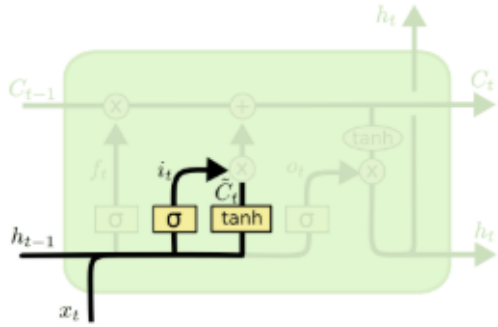

$$i_t = \sigma\left(W_i \cdot [h_{t-1}, x_t] \ + \ b_i\right)$$
$$\tilde{C}_t = \tanh(W_C \cdot [h_{t-1}, x_t] \ + \ b_C)$$

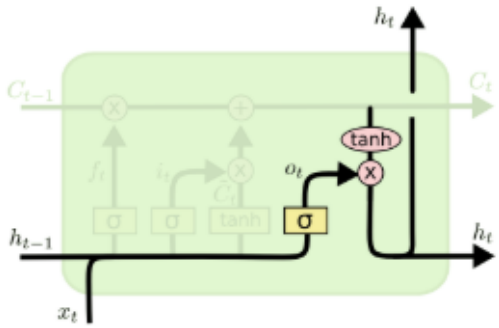

$$o_t = \sigma\left(W_o\left[h_{t-1}, x_t\right] + b_o\right)$$
$$h_t = o_t * \tanh\left(C_t\right)$$

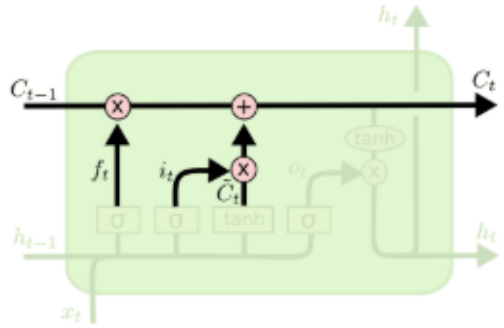

$$C_t = f_t * C_{t-1} + i_t * \tilde{C}_t$$

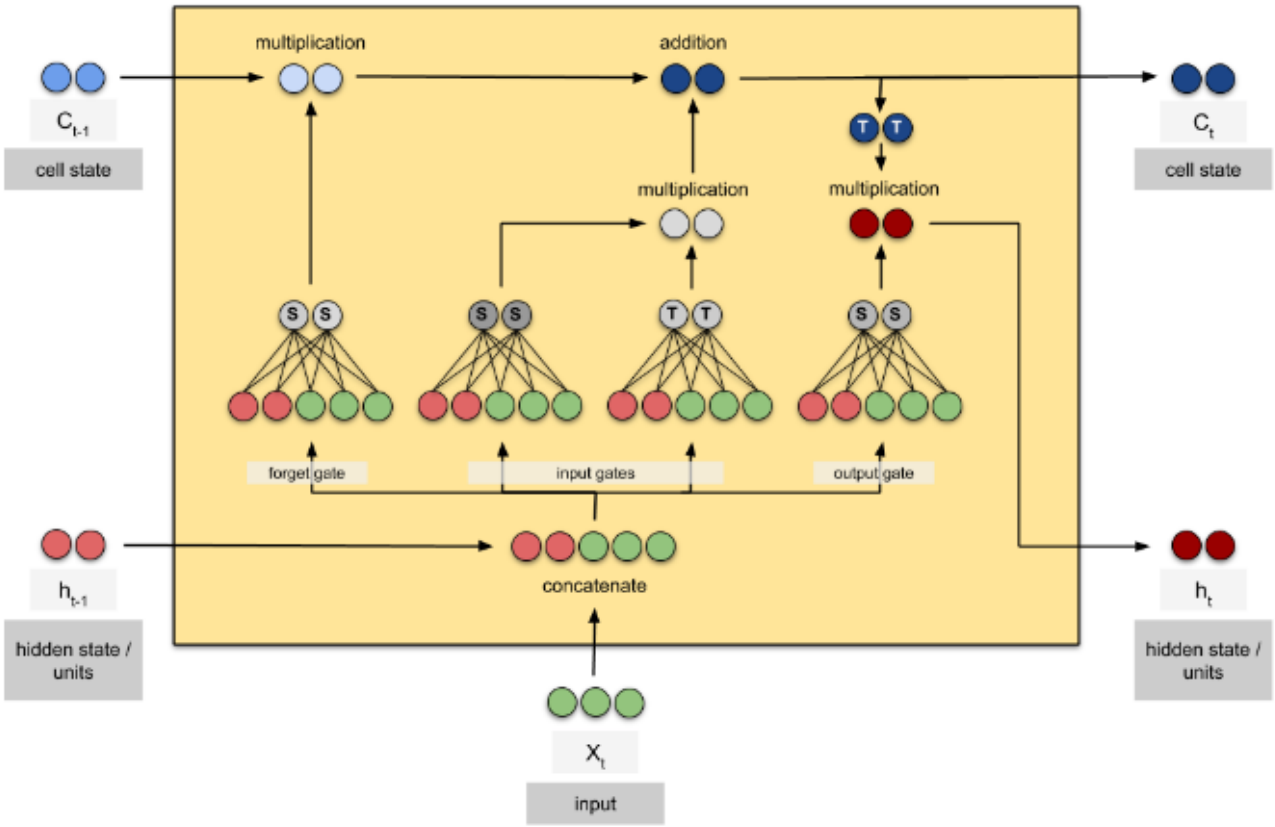

LSTM:

LSTM (Long Short-Term Memory，长短时记忆模型) 是目前使用最广泛的模型，它能够更好地对长短时依赖进行表达。

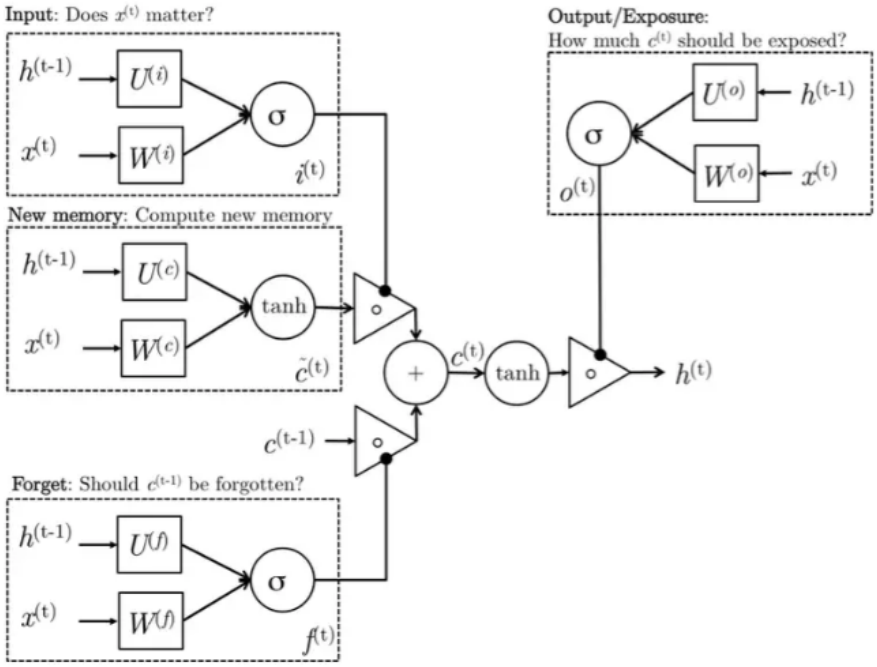

$$
\begin{aligned}
i^{(t)} &= \sigma(W^{(i)}x^{(t)} + U^{(i)}h^{(t-1)}) && \text{(Input gate)}\\
f^{(t)} &= \sigma(W^{(f)}x^{(t)} + U^{(f)}h^{(t-1)}) && \text{(Forget gate)}\\
o^{(t)} &= \sigma(W^{(o)}x^{(t)} + U^{(o)}h^{(t-1)}) && \text{(Output/Exposure gate)}\\
\tilde{c}^{(t)} &= \tanh(W^{(c)}x^{(t)} + U^{(c)}h^{(t-1)}) && \text{(New memory cell)}\\
c^{(t)} &= f^{(t)} \circ \tilde{c}^{(t-1)} + i^{(t)} \circ \tilde{c}^{(t)} && \text{(Final memory cell)}\\
h^{(t)} &= o^{(t)} \circ \tanh(c^{(t)})
\end{aligned}
$$

Variant of lstm

Variant 1: Add cell state to all gates

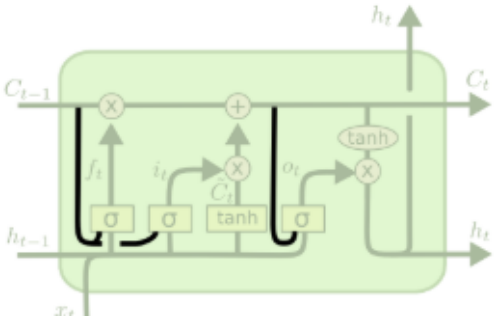

$$
\begin{aligned}
f_t &= \sigma\left(W_f \cdot [\boldsymbol{C_{t-1}}, h_{t-1}, x_t] \ + \ b_f\right)\\
i_t &= \sigma\left(W_i \cdot [\boldsymbol{C_{t-1}}, h_{t-1}, x_t] \ + \ b_i\right)\\
o_t &= \sigma\left(W_o \cdot [\boldsymbol{C_t}, h_{t-1}, x_t] \ + \ b_o\right)
\end{aligned}
$$

Variant 2: coupled forget and input gates

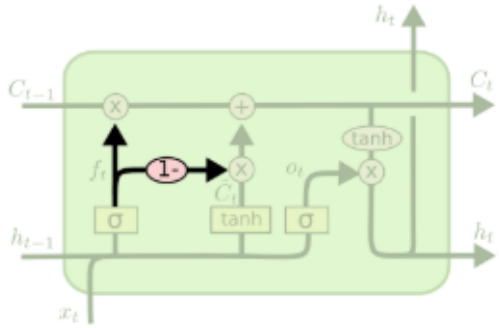

$$C_t = f_t * C_{t-1} + (1 - \boldsymbol{f_t}) * \tilde{C}_t$$

GRU: a variant of LSTM, simpler
Merge forget state and input state to one update state
Merge cell state and hidden state

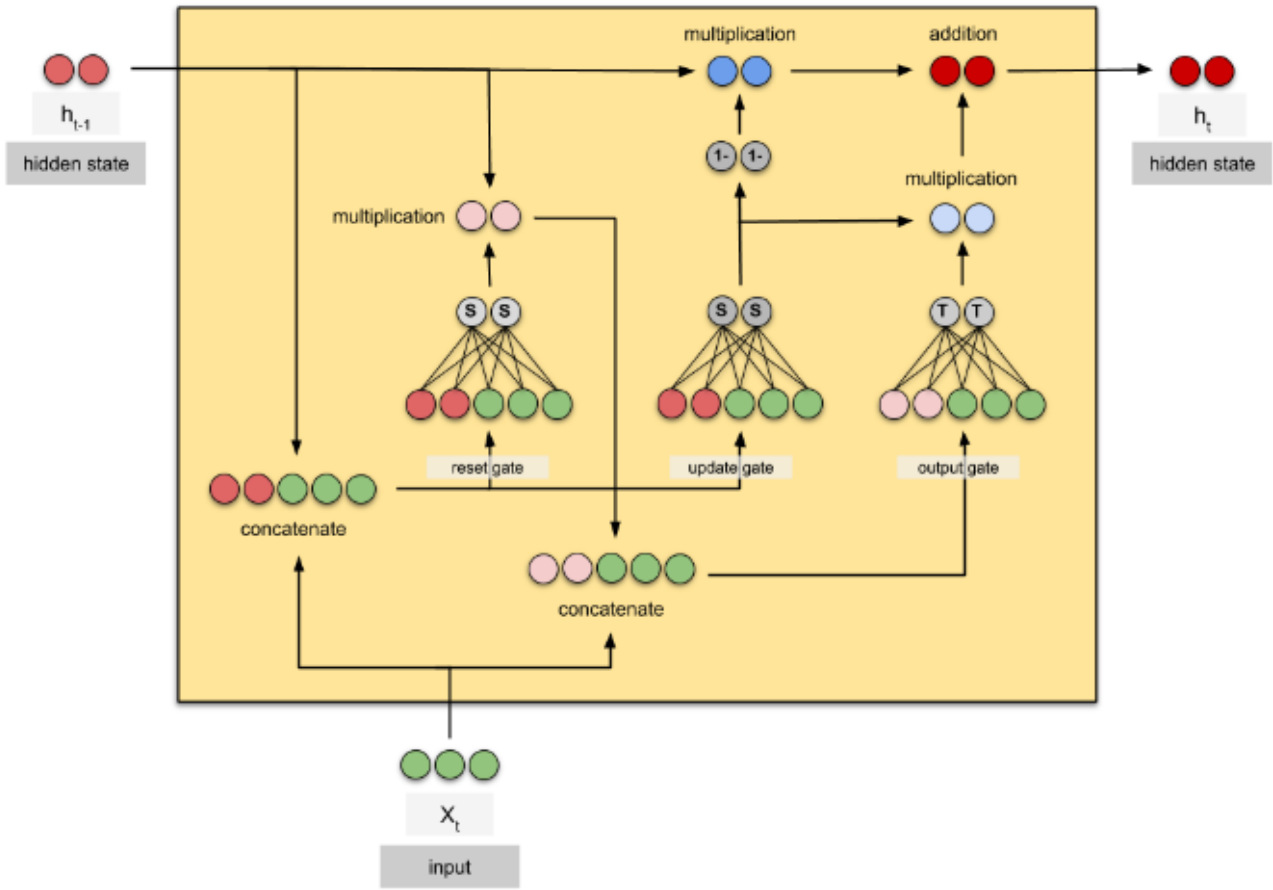

GRU：

为了解决上面的问题，让 RNN 有更好的表现，它有一些改良版模型。

GRU(Gated Recurrent Unit Recurrent Neural Networks)

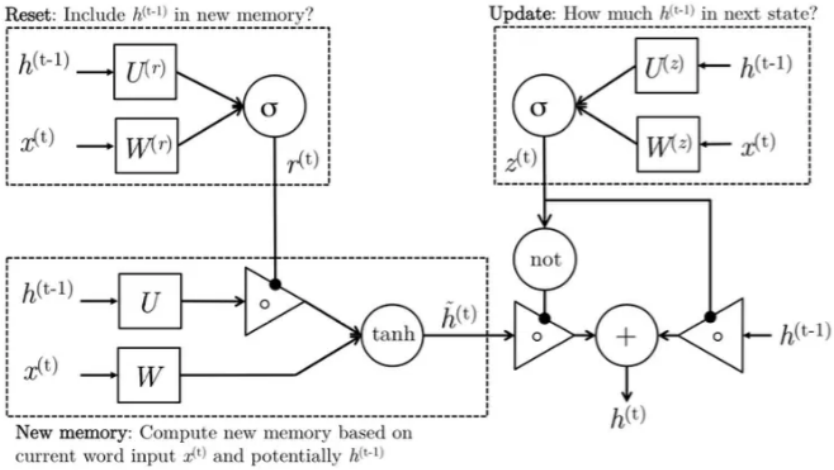

$$z^{(t)} = \sigma(W^{(z)}x^{(t)} + U^{(z)}h^{(t-1)}) \qquad \text{(Update gate)}$$
$$r^{(t)} = \sigma(W^{(r)}x^{(t)} + U^{(r)}h^{(t-1)}) \qquad \text{(Reset gate)}$$
$$\tilde{h}^{(t)} = \tanh(r^{(t)} \circ Uh^{(t-1)} + Wx^{(t)}) \qquad \text{(New memory)}$$
$$h^{(t)} = (1 - z^{(t)}) \circ \tilde{h}^{(t)} + z^{(t)} \circ h^{(t-1)} \qquad \text{(Hidden state)}$$